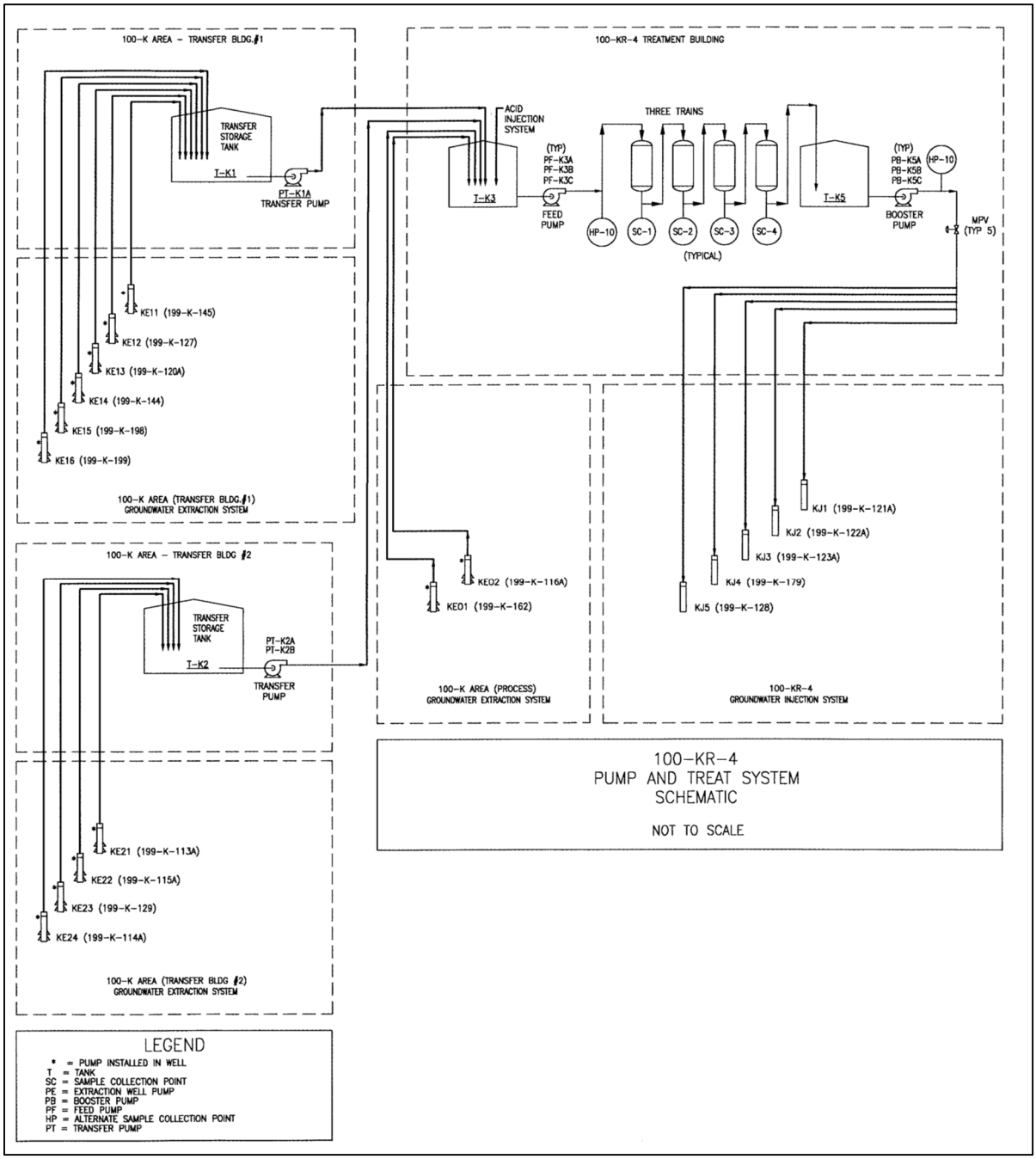

Figure 3-6. KR4 P&T System Schematic